Ariel-12 LED

IP65

CE, RoHS

Temp. **Col. 4000K**
cod. AR8012-NW

Temp. **Col. 3000K**
cod. AR8012-WW

- 230Vac
- 12W
- High brightness LED SMD
- 870 lumen (4000K)
  800 lumen (3000K)
- 105°
- Cable
- White
- Aluminium
- -20°C
  +45°C

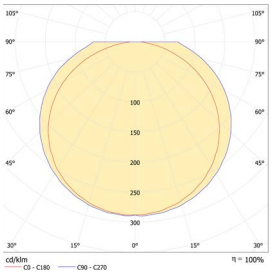

Ariel LED

LED technology Flood light, with slim and stylish design, the IP65 protection makes it suitable for the most varied applications in both indoor and outdoor environments. Thin and light can also be used for track mounting (three lines track adaptor code APL1443). Ideal for lighting buildings entrance, shops windows and every where diffused lighting is need it.

Code	Input Volt	Watt	Luminous Efficiency	CRI	LED Chip	Beam Angle	Body Material	Front Material	Insulation Class	IP Grade	IK Rate
AR8012-NW	230Vac	12W	100 lm/W	Ra>80	SMD LED	105°	Aluminium	Glass	I	65	07
AR8012-WW	230Vac	12W	100 lm/W	Ra>80	SMD LED	105°	Aluminium	Glass	I	65	07

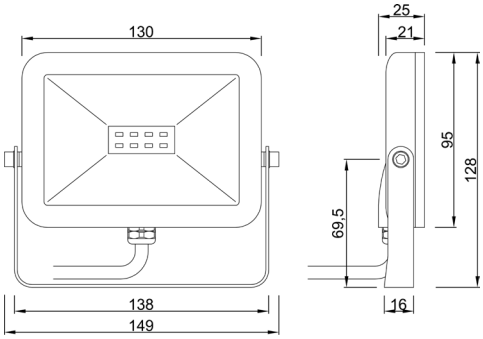

ACCESSORIO
Track light adaptor cod. APL1443

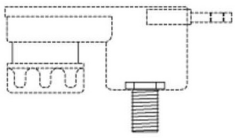

Arena Luci s.r.l. si riserva la facoltà di modificare le caratteristiche dei prodotti senza obbligo di preavviso
Arena Luci s.r.l. reserve the right to change products specifications at anytime without prior notice